Proceedings of the 2013 Joint ASME/USCG Workshop on Marine Technology & Standards
July 24-25, 2013, Arlington, Virginia, USA

Jurisdictional Acceptance of Non-ASME Pressure Vessels for Human Occupancy

Bart Kemper, P.E.
Principal Engineer
Kemper Engineering Services, LLC
Baton Rouge, LA

ABSTRACT: The Code of Federal Regulations specifically adopts the ASME Boiler and Pressure Vessel Code as the standards for diving systems in US waters. Not all hyperbaric systems are made to ASME standards. This paper presents methods used successfully to obtain US Coast Guard and other jurisdictional approval of non-ASME pressure vessels for human occupancy.

The US Coast Guard (USCG) is the jurisdiction charged with ensuring commercial diving operations in U.S. water are done safely and within the bounds of the law. One of the primary ways the USCG does this is ensuring all diving equipment meets specified standards. The standard for pressure vessels, including Pressure Vessels for Human Occupancy (PVHOs), is the American Society of Mechanical Engineering (ASME) Boiler and Pressure Vessel Code (BPVC) [1]. However, there are other well accepted pressure vessel codes used in other nations.

Fig. 1 shows a complex saturation diving system using five different pressure vessel design codes. None were ASME PVHOs. Normally a PVHO must be per ASME standards for acceptance in a US jurisdiction; however, PVHOs made to those standards may be accepted by USCG on a case-by-case basis based on the structure's evaluation per BPVC providing sufficient information is submitted. For other applications, such as Tunnel Boring Machines

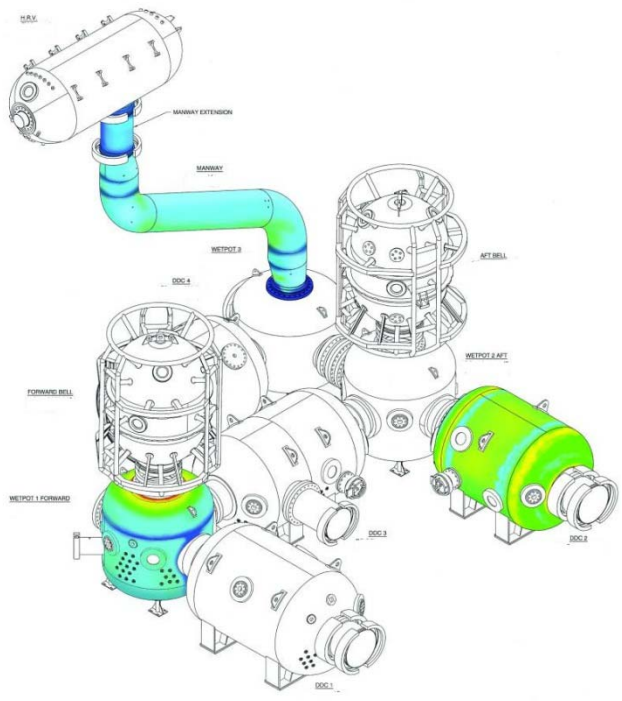

Fig. 1. An illustration of a complex saturation diving system, including two Submersible Diving Chambers (SDCs), and escape manway, and a Hyperbaric Rescue Chamber (lifeboat hull not shown.) The Finite Element Analysis colors on three of the PVHOs illustrate the loads analyzed must include the interactions of the chambers, such as the SDC on the Wetpot, as well as pressure-induced loads. This system was ABS certified with 5 different pressure vessel design codes, but none were ASME pressure vessels. The full system was accepted by the USCG.

using saturated atmosphere operations, the state pressure vessel board may be the jurisdictional authority. Jurisdictional needs vary, so is important to understand the jurisdiction's requirements as well as the specific application.

For diving and medical systems, citing ASME BPVC includes the code for new construction (ASME PVHO-1) [2] and the in-service guidelines for acrylic windows (ASME PVHO-2 [3]. In addition, there are several federal regulations [4, 5, 6] that modify the ASME codes as well as put forth other requirements. The definitions in Ref. 4 specify BPVC "Section VIII, or an equivalent code which the employer can demonstrate to be equally effective."

Based on experience, the USCG will accept a non-ASME pressure vessel as "equivalent" if the user demonstrates the vessel was properly manufactured, tested, certified, and maintained according to other codes and regulations and that pressure vessel meets ASME code, even at a downgraded pressure. The concept is simple, but the execution requires more attention to detail than engineering work for new PVHO design and construction. The methods offered in this paper are based on experience but do not reflect any review or endorsement by the USCG or any other authority. Each submission to a jurisdiction is evaluated on its own merits.

Codes

The Code of Federal Regulations (CFR) establishes the criteria for operating diving systems in US waters. It specifies the design codes to be complied with, such as BPVC and PVHO, as well as changes and additions to the code that must also be complied with. An example of this 46 CFR 54.01-35, which modifies BPVC section UG-25 by specifying additional corrosion parameters not in ASME codes. A good starting reference is App. B of the Coast Guard Diving Policies and Procedures, "Commercial Diving Regulatory Checklist." [7] However, a thorough review of cited CFRs is recommended to ensure full compliance with the current regulations. Regulations may change. It's also recommended to have a thorough understanding of the codes and regulations the PVHO currently meets in order to use existing inspections and certifications to show equivalency with the CFR-specified requirements.

The window requirements in PVHO are critical. While there are numerous pressure vessel codes, ASME PVHO was the first code to address windows. However, since other authorities have adopted ASME PVHO, the windows and window seats designed to other codes typically comply with PVHO. As long as the windows and window seats comply with ASME PVHO, other variations from ASME codes can often be addressed by testing and detailed engineering analysis.

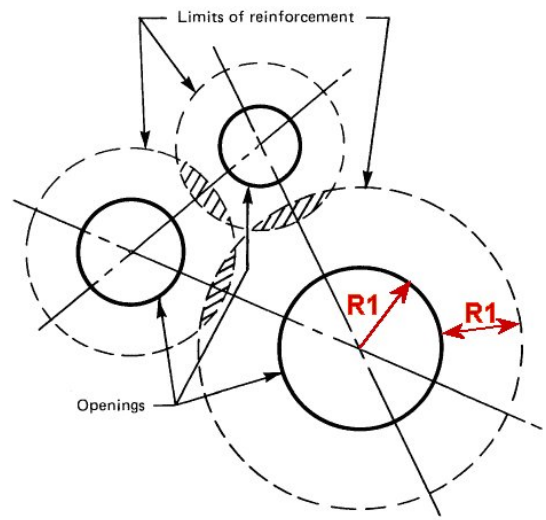

(b) More Than Two Openings Spaced With Limits of Reinforcement Overlapping

Fig. 2. Illustration from BPVC Section VIII, UG-42, showing there should be a full radius of clear metal around each opening in the shell or head. This applies regardless of the thickness of the ring within the opening.

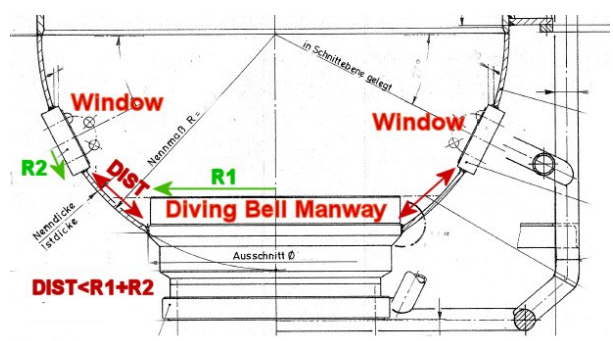

Fig. 3 Cross section of a Submersible Diving Chamber (SDC), also known as a Diving Bell. Windows are needed to safely operate. However, the distance between head openings should be more than the radius of window plus the radius of the manway in order to satisfy the letter of the code. Stress analysis can resolve these structural geometry issues.

One of the most common differences between different national pressure vessel codes is geometry. Minimum allowable knuckle radius, allowable distances between fittings, weld types, and other design details can vary from code to code. There are also features common to diving, such as bottom side viewports in diving bell heads, which conflict with allowable locations and distances. (Figs. 2 and 3). Downrating the maximum working pressure for the system can resolve some of these specific issues as well as increase the overall safety of the system.

A proven approach is to use a code calculation package such as COMPRESS and PVElite to provide a comprehensive set of "by rules" Section VIII calculations for Division 1 or Division 2. This addresses a common pitfall of using spreadsheets or less complete means to present code calculations, which may selectively show the compliant aspects while omitting the noncompliant features. The code package will provide a list of noncompliant features and other shortfalls. While the shortfalls still need to be addressed, everything that is not on the shortfall list complies with the BPVC.

Fig. 4 A 12m (40ft) diameter Japanese-built Tunnel Boring Machine for a worksite in Washington State. The PVHO was not designed nor built to ASME standards The state pressure vessel board required a detailed engineering review to approve the PVHO installed in this TBM. .

Tunnel Boring Machines (TBMs)

The tunneling industry recently began using pressurized drill faces to control the TBM cutting head interface with the water/soil/rock being drilled. This replaces using large caissons to pressurize an entire tunnel. In order to operate and maintain the TBM at depth, the operators "dry dive," or work in a pressurized, gas controlled environment similar to what the diving industry uses. While there is little else in common with diving, the physiology of pressurized atmosphere and the life-safety issues regarding structural integrity and systems reliability is the same for both applications. The Occupational Safety And Health Administration (OSHA) issued a Letter of Instruction in 2010 stating that "OSHA recognizes ASME PVHO-1 standards as specifying the construction industry's usual and customary practice for preventing death and serious injury associated with … pressurized work places; therefore, OSHA would enforce (ASME PVHO-1) under the general-use clause." [8]

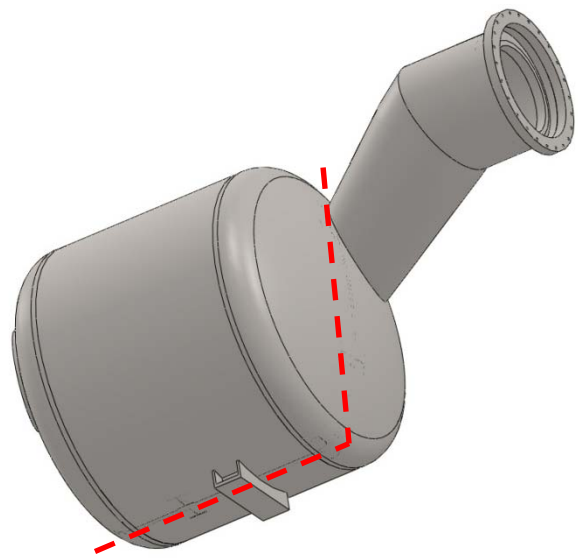

Fig. 5. Solid model of the Tunneling Safety Lock used with the TBM in Fig. 4. This shows the drilling side. Workers enter through one of two manways to the left and use the tunnel to the right to reach the control room. The cylinder is split in half along the dashed lines by a vertical bulkhead with an internal door. This allows half the cylinder to be used to decompress outbound workers while inbound workers enter on the other side. Fig. 6 shows the internal geometry.

TBM applications have their own challenges. TBMs are often custom built for a specific job. This space available for the PVHO is often limited so shapes and features not common in normal pressure vessels are common. These PVHOs are subject to more shock and vibration than any other PVHO application. Currently the majority of

TBM PVHOs are not designed to ASME code, despite the OSHA Letter of Instruction [8]. While some jurisdictions will allow for equivalency as the USCG does, others such as New York State will not. This can be further complicated by the tunnel pathway, which can cross several jurisdictional boundaries. Thorough documentation is required to address all jurisdictional constraints.

Finite Element Analysis

A successful approach to address the shortfalls from the code calculations is using Finite Element Analysis (FEA) per the "by analysis" section of BPVC, Section VIII, Div. 2 [1]. This allows a more free-form design method providing it properly applies more rigorous engineering analysis. Non-conforming structural geometries, such as small knuckle radii or windows too close to hatchways, can be computationally modeled and analyzed to demonstrate the stresses are within allowable limits. Traditional calculations and conventional code calculation packages are unable to provide these detailed results, such as shown in Fig. 6.

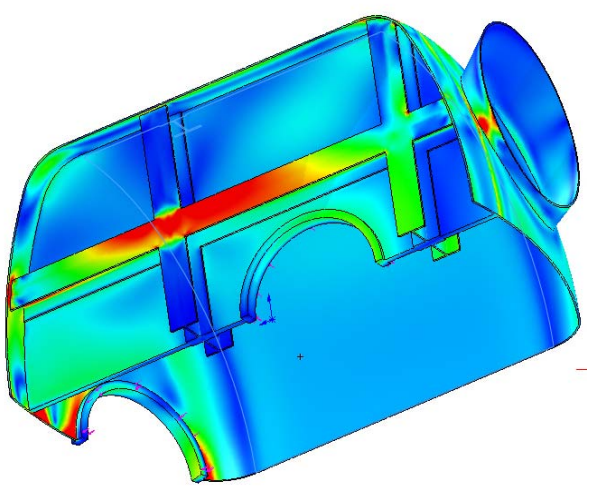

Fig. 6. A stress plot of the Tunneling Safety Lock from Fig. 5. The interior vertical bulkhead as well as the external door (left) and internal door are clearly shown. By inspection, the external door shown to the left is less than one door diameter from the bulkhead, resulting in elevated coupled stresses between the two structures. The flat bulkhead is reinforced with structure steel on both sides to account for differential pressurization. These features are not standard pressure vessel structures and have complex stress interactions.

A potential pitfall is addressing only part of the "design by analysis" requirements. An example is providing the analysis to show global plastic collapse will not occur while ignoring buckling and fatigue. While it may seem intuitive the required analyzes are not needed, failing to address code-specified requirements can raise issues with the reviewing engineer.

FEA can also be used to address the diving PVHO-specified "marine loads" for shipboard PVHO's. Marine loads must be either calculated based on expected service at that location in the ship or be assumed to be an additional load of 1g/2g/1g load in the x/y/z directions, with "y" being vertical. These loads are not part of a standard code calculation package. FEA can also be used to address localized issues, such as pitting and local corrosion, as well as system-wide issues such as loads on the anchorages due to tunneling or shipboard movement and vibration.

The reviewing engineer should proactively assess all loads that may be applicable in order to reduce the likelihood of rejection by the jurisdiction. Section UG-22 in Div. 1 [1] has a specified list of considerations, In Div. 2 it is paragraph 4.1.5.3 for "design by rules" and Table 5.3 coupled with paragraph 5.1.1.2 for "design by analysis" [1]. Both divisions have tables of load combinations that must be addressed.

Materials

If a PVHO is made to a non-ASME code, it is likely the cited material is not an ASME material per Section II of the BPVC. However, it is often possible to compare chemical makeup and required mechanical properties to determine an equivalent ASME pressure vessel material. Once an equivalent material is established the tables in Section II provide the allowable stress levels needed for calculations and computer modeling.

Not all materials have an ASME equivalent. However, Section II [1] has guidelines to establish allowable stress levels. Once these are established, Section VIII, Div. 2 provides methodology for developing stress/strain curves, fatigue curves, and other design data needed for calculations and computer modeling. These curves are more conservative than the literature values for these properties. Simply providing lab tests or literature values for pressure vessel

materials without addressing code requirements can pose an issue with the reviewing engineer.

It must be noted simply determining the allowable stress levels is not sufficient. Heat treatment properties, OEM caveats of material use, and other factors must be accounted for. The reviewing engineer must pay close attention to detail in order to determine what the other pertinent properties of the material are. Many jurisdictions will not allow a variance in materials or will require substantial documentation before considering a non-ASME material.

Maintenance and Testing

Maintenance logs, inspections, hydrostatic testing, x-rays of welds, and full design drawings are some of the required items outlines in the CFRs. Unfortunately, these documents are not always properly maintained when PVHOs are bought and sold. Manufacturers are not required to keep records for the life of the vessel and may go out of business. The original manufacturer cannot always be relied upon for this information.

If the original documents are not available, the current as-built state must be established and documented, to include full drawings. In some cases laser-based surveys have been used to help recreate missing drawings. Full photographic surveys to document PVHO conditions and system configuration helps establish the PVHO's current state. Ultrasonic testing surveys are highly recommended to establish key thicknesses and verify weld integrity. Witnessed hydrotests are a key CFR-specified requirement as well are required by ASME code.

Much of this information is needed to do code calculations and engineering analysis. Diving systems certified to a Classing Society such as the American Bureau of Shipping (ABS) or Germanischer Lloyd (GL) generally require drawings, calculations, and testing for commissioning and regular maintenance to maintain class certification. While the required calculations are not the same as the ASME calculations, they can provide a starting point for information and design intent. Maintenance records, along with nondestructive testing results, provide information for cyclic loading, material conditions, and records of modifications. For this reason class-certified and maintained systems are more likely to be acceptable for ASME-equivalent ratings by the USCG providing the appropriate supporting engineering is done.

Given these PVHOs are in service, it is possible pitting, dents, and other flaws could be found. These can be addressed by the in-service guidelines found in [9], "Fitness-For-Service." Fitness-for-service reviews will determine whether a flaw is significant and how to determine if it is acceptable for further service. FEA and other methods can be used to justify whether or not an identified flaw requires a repair.

Summary

A well maintained, well-documented non-ASME PVHO can be accepted by the USCG or other jurisdictions for operations in the US. The jurisdiction will typically require documentation, inspections, and calculations required for ASME design and construction required to establish conformance or equivalence to ASME. Detailed analysis per Division 2, Section VIII of the BPVC can be used to establish equivalency to ASME code for geometry that does not conform to standard ASME design. Downrating the maximum pressure can increase the likelihood of USCG or other appropriate jurisdictional acceptance. The challenge is often the need to recreate original documentation. Detailed engineering analysis can resolve differences in pressure vessel codes and jurisdictional regulations.

About the author:
Bart Kemper, P.E. a 1992 graduate of Louisiana State University. Kemper is the principal engineer for Kemper Engineering Services, LLC, an engineering consulting firm working regionally, nationally, and internationally in petrochemical, marine, manufacturing, defense, and other industries. He has authored numerous patents and professional papers and is a member of ASME, NSPE, SNAME, ASM, and other technical societies. He serves on the ASME PVHO Codes and Standard Committee and its various subcommittees and working groups. He is also an US Army Corps of Engineers officer as a member of the Army Reserves.

References

1. ASME Boiler & Pressure Vessel Code. American Society of Mechanical Engineers, NY. 2010.
2. Safety Standard for Pressure Vessels for Human Occupancy (ASME PVHO-1-2007) American Society of Mechanical Engineers, NY. 2007.
3. Safety Standard for Pressure Vessels for Human Occupancy: In-Service Guidelines for PVHO Acrylic Windows (ASME PVHO-2-2003) American Society of Mechanical Engineers, NY. 2003.
4. 29 (Labor) CFR 1910, Subpart T (Commercial Diving Operations)
5. 46 (Shipping) CFR 54 (Pressure Vessels)
6. 46 (Shipping) CFR 197, Subpart B (Commercial Diving Operations)
7. Coast Guard Diving Policies and Procedures Manual (Vol. 1) COMDTINST M3150.1C. Dept. of Homeland Security, US Coast Guard. June 2009.
8. Occupational Safety And Health Administration (OSHA) Letter of Interpretation #20100303-9658, dated July 23, 2010. "Standards for decompression chambers for use with pressurized face-tunnel boring machines."
9. Fitness-For-Service (API 579-1/ASME FFS-1, June 2007) American Society of Mechanical Engineers, NY. 2007.